MANITOU

TMT SERIES

TRUCK MOUNTED FORKLIFTS

HANDLING YOUR WORLD

BE MANITOU.

SUCCESS THROUGH IMAGINATIVE POWER

MANITOU, the world's largest manufacturer of all-terrain forklift trucks, began its roots in a family tradition of innovation and imaginative power. For generations, the Braud family has dedicated themselves to creating innovative products for the lifting and handling markets.

Manufacturing its first truck in 1957, MANITOU is a pioneer in the rough terrain forklift market. By responding to market trends, MANITOU offers a complete line of rough terrain handling equipment adapted to the specific needs and challenges of each industry.

The long history of reliable, relevant equipment has led to more than 500,000 MANITOU Group machines sold to more than 120 countries. This worldwide presence is backed up by a MANITOU dealer network staffed with trained mechanics and sales specialists to help you with your material handling requirements.

MULTI-APPLICATION PERFORMANCE

The MANITOU TMT 55 Truck-Mounted Telescopic Forklift provides convenience and fast delivery times with the ability to unload a trailer from a single side. The telescopic boom, tilt control and standard stabilizers make these forklifts adaptable for many markets. The unique "free lift" boom design provides unmatched 360 degree operator visibility without the need of a stationary mast. This allows the TMT 55 to clear entrances as low as 96.5 inches (2.45 m) high while carrying a full load of materials.

ALL-NEW!

TMT 55 HT
TMT 55 XT

5,500 lbs. (2495 kg) lift capacity
11'3" (3.43 m) lift height
49 hp (37 kW) Tier IV-Certified

ALL-NEW!

TMT 55 HT-4W
TMT 55 XT-4W

5,500 lbs. (2495 kg) lift capacity
11'3" (3.43 m) lift height
49 hp (37 kW) Tier IV-Certified
4-Way Steering

HT- High Traction (high flotation tires, 400 cc front drive and 560 cc rear drive tires)
XT- Extra Traction (high flotation tires, 750 cc front drive and rear tires larger hydrostatic pump)

MANITOU ADVANTAGES

TELESCOPIC BOOM

- Reach over a trailer or truck for one side unloading, reducing time on the jobsite.
- Patented Side-Shift technology.
- Ability to handle long loads or several pallets at a time.

INDUSTRY'S SHORTEST OVERHANG

- The Manitou TMT 55 has the shortest trailer overhang in the industry, 4' 8" (1.4 m).
- The light overall weight of the machine creates extra capacity to transport more materials with each load.

UNMATCHED VISIBILITY

- Manitou's "Free Lift" boom is designed without a mast to provide 360 degree visibility of the load from all sides and the ability to drive through low entrance ways.

ROPS/FOPS CERTIFIED

- The TMT 55 provides increased safety for the operator in the case of rollover or falling object protection.

UNIQUE APPLICATIONS

- Brick and Block
- Lumber Industry
- Drywall Construction
- Food and Beverage
- Transport Logistics
- Scrap and Recycling
- Windows and Doors
- Rental Industry
- Environment Applications and Much More.

POWER and PERFORMANCE

BUILT TO PERFORM FAST DELIVERIES

FREE LIFT BOOM DESIGN

The Manitou Patented "free lift" boom design of the TMT 55 is able to provide full forklift maneuverability without the use of a mast. This creates the ability for the boom to extend telescopically, offers more machine ground clearance, and allows the low overall height of the machine to remain consistent, making it possible to drive through restricted entrances.

HYDROSTATIC TRANSMISSION

The TMT 55 Truck Mounted forklifts feature a hydrostatic transmission with a hydraulic reversing shift, providing more power and faster machine control.

MAXIMUM LIFT HEIGHTS 11'3" [3.42m]

MAXIMUM LIFT CAPACITY

5,500 lbs. [2495 kg]

LOW OVER-HEAD CLEARANCE, MACHINE HEIGHT IS ONLY

96.5" [2.45m]

MAXIMUM FORWARD REACH

58" [1.47 m]

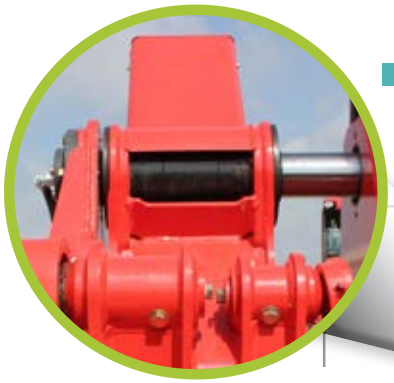

PATENTED SIDESHIFT DESIGN

The Manitou sideshift system is factory built into the forklift, positioned higher on the boom out of reach from potential jobsite damage.

SHIFTS **3" [76mm]** EACH DIRECTION

PANORAMIC CAB = 360° VISIBILITY

TMT 55 HT/Standard *TMT 55 HT/4-WAY*

ADD EXTRA FORWARD CAPACITY WITH BUILT-IN STABILIZERS

All TMT 55 models come standard with built-in stabilizers. The design will slightly vary on the 4-way due to the position of the wheels. The maximum forward capacity will double from 1,650 lbs. (748 kg) to 3,300 lbs. (1497 kg) when fully deployed.

COMPACT SIZE!

MACHINE WIDTH

101" [2.56m]

TURNING RADIUS AS LOW AS

103" [2.61m]

OPERATOR'S CAB

CONTROLS and ERGONOMICS

NEW! PLASTIC ROOF COVER

This is a new standard feature for all TMT 55 models.

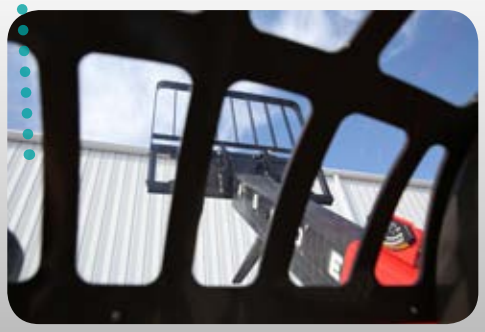

"Quick access, and Easy operation"

NEW! DASHBOARD DIGITAL LED DISPLAY

The enhanced digital display shows hour meter, fuel level, driving direction, engine water level and temperature, lights, fluid indicators and warning lights all in one place. Work lights, parking brake and horn are located to the left of the steering wheel.

Features include an adjustable vinyl seat, interior rearview mirror, exterior cab mirror, plastic roof cover, reverse lights, three working lights, pre-wired DOT light package for driving at night, and more.

TWO STEP ENTRANCE WITH GRAB HANDLE

The easy to enter, spacious ergonomic cab provides extra room with three joystick controls placed to the right of the operator for simplified operation.

DIFFERENTIAL LOCK SWITCH

This switch locks all wheels into drive, causing all three wheels to rotate in the same direction and speed.

4-WAY STEERING WITH A FLIP OF A SWITCH

Select 4-way steering in the switch panel, left of the steering wheel, to travel sideways for carrying longer, wider loads. Available on the TMT 55 4-Way only.

FEATURES

1. INTUITIVE EASY TO USE CONTROLS

The TMT 55 forklift comes standard with a single joystick that controls the raising and lowering of the boom, telescopic extension and retraction of the boom, and provides a button on the left side to select driving direction.

2. CARRIAGE TILT AND SIDE SHIFT

The middle joystick controls the functions of the carriage, tilting up or down, and making sideshift adjustments for load placement and pick-up.

3. STABILIZERS JOYSTICK CONTROL

The last joystick is to control the standard integrated stabilizers.

TMT 55 STANDARD FEATURES

ENGINE

- Kubota 49 hp (37kW) Tier IV Certified
- No Regeneration or Special Fluids Needed

TRANSMISSION

- Hydrostatic Transmission
- Hydraulic Reversing Shift
- Number of Gears: 1/1

HYDRAULICS

- Gear Type
- Flow Divider with Priority to Steering

OPERATOR'S CAB

- Adjustable Vinyl Seat
- Roof Top Plastic Cover
- Joystick Controls
- Interior Rearview Mirror
- Exterior Cab Mirror
- Horn and Back-up Alarm
- 360 degree Visibility
- Strobe Light (Amber) includes break away bracket
- 2" Seat Belt

BRAKES

- Service Brake
- Parking Brake

OTHER

- Carriage Load Support Rollers
- Integrated Stabilizers
- Reverse and Front/Back Work Lights
- Patented Side Shift, 3" (76 mm) in each direction
- Battery Cut-off
- Pins for Chain Style Mount
- Full Instrumentation
- Easy-Accessible Single Engine Cover
- Carriage Rotation 107°
- Pre-Wired DOT Light Package

TMT 55 OPTIONAL FEATURES

- **Boom Wipers**
- **Cyclonic Pre-cleaner**
- **Engine Block Heater**
- **Underbelly Protection**
- **3" Seat Belt**
- **License Plate Change Bracket with Light**
- **Tire Sealant or Liner**
- **Variety of Attachments**
- **Multiple Tire Options**

MULTIPLE TIRE OPTIONS

TURF | LIGHTENING | MUD SHARK | OUTRIGGER | SAND

ATTACHMENT SELECTION AND MOUNTING STEPS

MANITOU TMT 55 TRUCK MOUNTED FORKLIFT ATTACHMENT SELECTION

		TMT HT/XT	TMT HT-4W/XT-4W
FORKS	Pallet Forks	●	●
	Lumber Forks	●	●
	Brick / Block Forks	●	●
	Gypsum Forks	●	●
OTHER	Load Backrest - Basic	●	●
	Load Backrest - Folding	●	●
MOUNT KIT SELECTION	Pallet and/or Gypsum Fork Mount Kit	●	●
	Brick and Block Fork Mount Kit	●	
	Lumber Forks Mount Kit	●	●
	Chain Mount Kit *(Moffett Style)*	●	●
	Hook Mount Kit *(Princeton Style)*	●	●

TRUCK MOUNTING TAKES SIX EASY STEPS

The TMT 55 offers the shortest trailer overhang in the industry, built to easily mount to the back of a truck:

OPERATOR USES THE SIDESHIFT JOYSTICK TO CENTER THE BOOM.

FORKS ARE DRIVEN INTO THE FORK POCKETS INSTALLED UNDER TRUCK BED.

OPERATOR LOWERS THE BOOM AND TILTS UNIT FORWARD UNTIL FULLY ELEVATED.

OPERATOR USES A HOOK TO EXTEND TWO SLIDE BARS TO SUPPORT THE WEIGHT OF THE MACHINE ON THE TRUCK.

OPERATOR RETRACTS THE BOOM FULLY, RESTING THE TMT ON THE TWO SLIDE BARS, THEN TILTS MACHINE BACK ENSURING TIRES ARE FIRMLY AGAINST THE UNDERSIDE OF THE TRUCK BED.

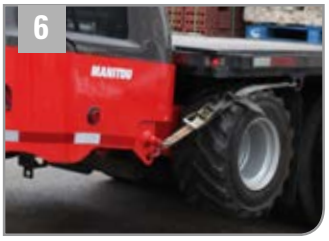

LASTLY, STRAPS ARE USED TO SECURE UNIT TO THE TRUCK BED.

TMT 55 TRUCK MOUNTED FORKLIFT

Load charts based on 24" load center per ANSI/ITSDF B56.14

	TMT 55	TMT 55HT TMT 55XT
A	4'0" (1219)	4'0" (1219)
B	5'5" (1651)	5'5" (1651)
C	0'1.7" (43)	0'1.7" (43)
C1	2'10" (863)	2'10" (863)
C2	1'7" (482)	1'7" (482)
D	6'9" (2057)	6'9" (2057)
D1	6'7" (2006)	6'7" (2006)
D2	6'2" (1879)	6'2" (1879)
E	10'8" (3251)	10'8" (3251)
E1	9'3.5" (2832)	9'3.5" (2832)
E2	8'1" (2463)	8'1" (2463)
F	7'0" (2133)	7'2.5" (2197)
G	0'10" (254)	0'10" (254)
H	0'2.3" (58)	0'2.3" (58)
I	11'3" (3429)	11'3" (3429)
I1	11'7" (3530)	11'7" (3530)
J	2'7.5" (800)	2'7.5" (800)
K	4'2" (1270)	4'2" (1270)
K1	4'2" (1270)	4'2" (1270)
K2	5'0" (1524)	5'0" (1524)

	TMT 55	TMT 55HT TMT 55XT
K3	0'6" (152)	0'6" (152)
L	0'1.6" (40)	0'1.6" (40)
M	1'4" (406)	1'4" (406)
M1	1'9" (533)	1'9" (533)
N	6'2" (1879)	6'2" (1879)
O	0'4" (101)	0'4" (101)
P	140°	140°
R	6'8" (2032)	6'8" (2032)
S	11'5" (3479)	11'5" (3479)
T	9'0.5" (2755)	9'0.5" (2755)
U	8'0.5" (2451)	8'0.5" (2451)
V	9'0.5" (2755)	9'0.5" (2755)
V1	0'5.75" (146)	0'5.75" (146)
V2	7'2" (2184)	7'2" (2184)
W	7'11" (2413)	8'5.5" (2578)
Y	98°	98°
Y1	1.58°	1.58°
Z	14°	14°
Z1	110.4°	110.4°

(mm)

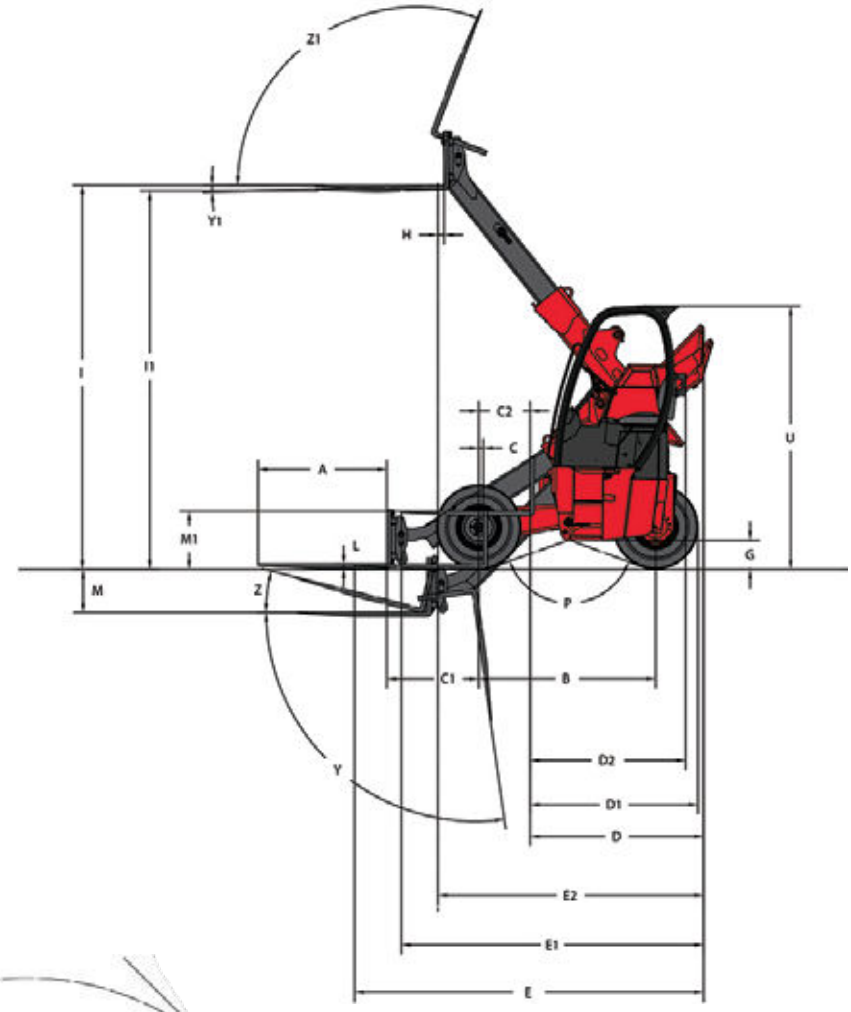

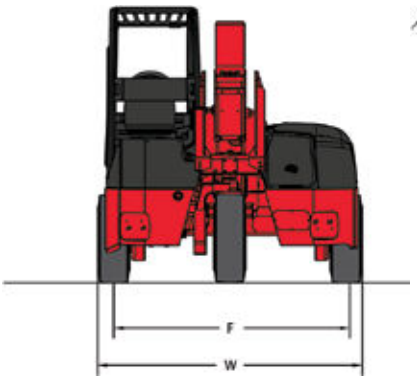

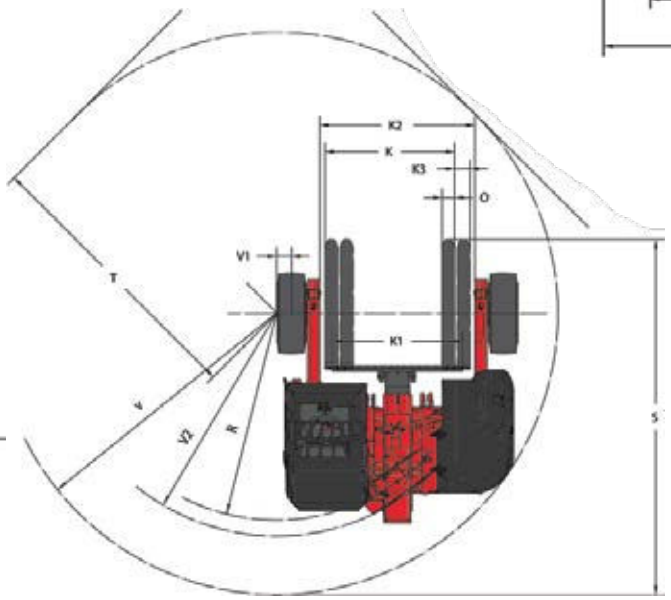

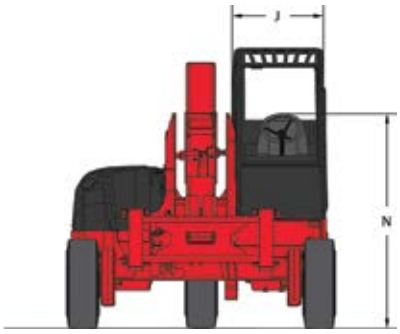

TMT SERIES MODEL DESIGNATION

HT - High Traction (high flotation tires, 400 cc front drive and 560 cc rear drive motors)

XT - Extra Traction (high flotation tires, 750 cc front and rear drive motors, larger hydrostatic pump)

DIAGRAMS TMT 55 4-WAY

TMT 55HT 4-WAY / TMT 55XT 4-WAY					
A	4'0" (1219)	J	2'7.5" (800)	T1	9'0.75" (2762)
B	5'5" (1651)	K	4'2" (1270)	U	8'0.5" (2451)
C	0'1.8" (45)	K2	5'3.3" (1607)	U1	2'8" (812)
C1	2'9.1" (840)	K3	0'6" (152)	U2	6'0" (1828)
C2	1'5.4" (441)	L	0'1.6" (40)	V	8'10.9" (2715)
D	6'8.8" (2052)	M	1'3.7" (398)	V1	1'4" (406)
D1	6'7" (2006)	M1	1'9.4" (543)	V2	7'0.5" (2146)
D2	6'2.2" (1884)	N	6'2" (1879)	V3	9'0.75" (2762)
E	9'3" (2819)	O	0'4" (101)	V4	8'1" (2463)
E1	8'1.5" (2476)	P2	131°	W	8'5.5" (2578)
E2	10'8" (3251)	R	6'6" (1981)	Y	98°
F	6'2" (1879)	R1	7'7" (2311)	Y1	1.58°
G	0'10.1" (256)	S	11'5" (3479)	Z	14°
H	0'2.3" (58)	S1	9'0.75" (2762)	Z1	110.4°
I	11'3.75" (3448)	T	9'9.7" (2989)		

(mm)

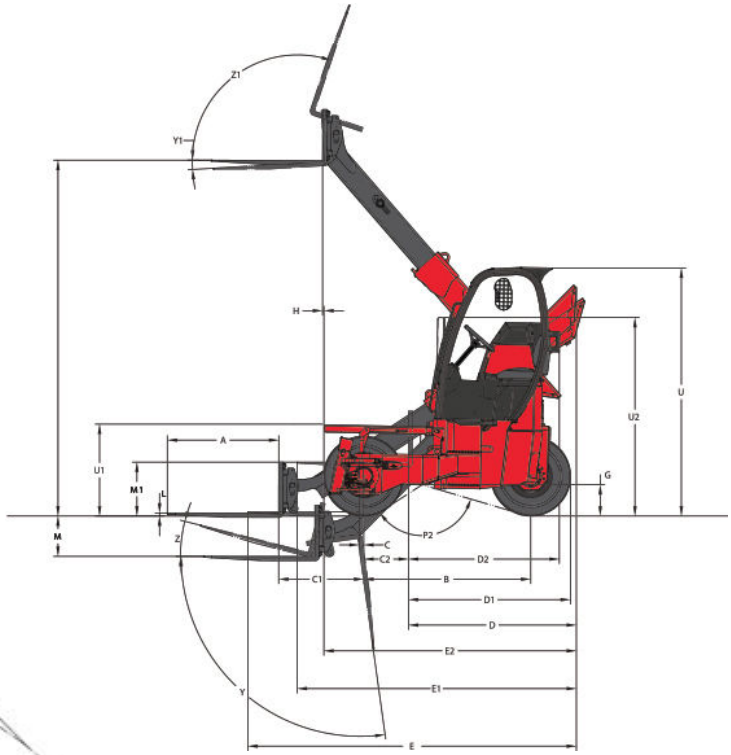

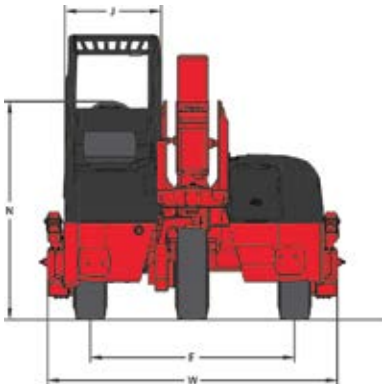

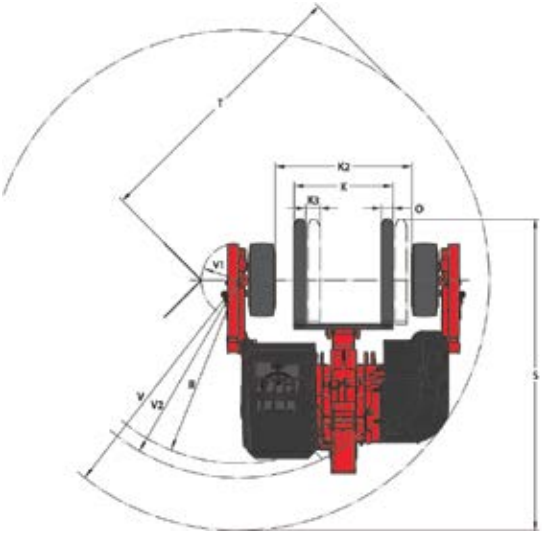

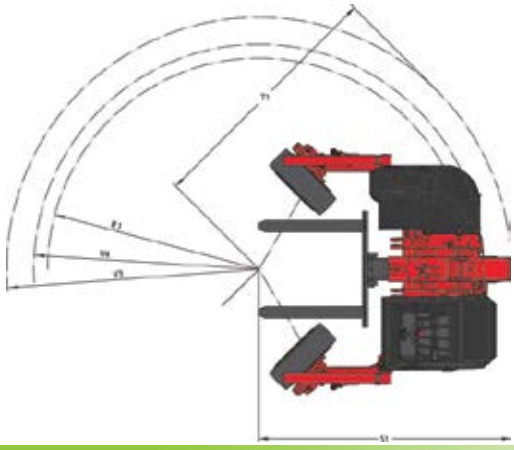

UNIQUE APPLICATIONS

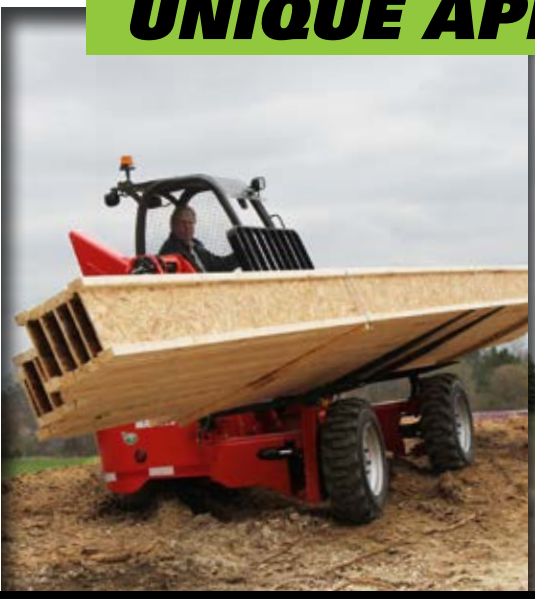

LUMBER // BRICK/BLOCK // DRYWALL // MOVING/STORAGE // ROOFING // GENERAL BUILDING // TRUCK DELIVERIES // FOOD/BEVERAGE // AND MORE

SAFETY and SERVICEABILITY

NEW SINGLE ENGINE COVER DESIGN
Full access to the engine compartment and other maintenance components under one hood for faster serviceability.

BUILT FOR ROUGH TERRAIN
The one piece frame structure is built for more strength and durability, increasing overall machine longevity.

ROPS/ FOPS CERTIFIED
Designed for operator protection, the cab of the TMT 55 satisfies ROPS and FOPS requirements for rolling over and falling object protection.

ANGLE GAUGE AND EXTEND LETTERS
Operator will be able to efficiently place and pick loads with the boom extend letter indicators and boom angle gauge.

EXCELLENT 360° VISIBILITY
The panoramic cab provides optimal visibility of the forks for precise placement of loads, using all fields of vision including the roof window, with no mast to obstruct forward views. An interior rearview mirror and external cab mirror come standard on the TMT 55 Truck Mounted forklifts, enhancing the operator view of the jobsite for accurate maneuverability.

EXTENDED SERVICE
Available up to 5 years or 6,000 hours

Maniplus™

ESSENTIAL Coverage
Powertrain coverages

2 offers

TOTAL Coverage
All machine components

*Contact your local dealer for more information.

TMT SERIES TRUCK MOUNTED FORKLIFT SPECIFICATIONS

		TMT 55HT TMT 55XT	TMT 55HT-4W TMT 55XT-4W
LIFT CAPACITY	Maximum Lift Capacity* (kg)	5,500 lbs. (2495)	5,500 lbs. (2495)
	Capacity at Maximum Reach* (kg)	3,300 lbs. (1497)	3,300 lbs. (1497)
LIFT HEIGHT	Maximum Lift Height (m)	11'3" (3.43)	11'3" (3.43)
	Maximum Forward Reach (m)	4'10" (1.47)	4'10" (1.47)
ENGINE	Type	Kubota D1803-CR Tier IV	
	Power @ 2700 rpm (kW)	49 hp (37)	
	Displacement (cm³)	111.4 cu.in. (1826)	
	Maximum Torque @ 1450 rpm (Nm)	111 ft.lbs. (150.5)	
	Injection / Cooling	Direct/ Water	
TRANSMISSION	Type	Hydrostatic, Hydraulic Reversing Shift	
	Maximum Travel Speed (km/hr)	7 mph (11.2)	7 mph (11.2)
HYDRAULICS	Pump Type	Gear Type, Flow Divider with Priority to Steering	
	Pressure (bar)	3600 psi (245)	3600 psi (245)
	Flow Rate (L/min.)	12 gpm (46)	12 gpm (46)
BRAKES	Service Brake	Hydrostatic	
	Parking Brake	Spring-Applied, Hydraulic Release (SAHR)	
FORKS	Fork Length (mm)	48" (1219)	48" (1219)
	Fork Width x Thickness (mm)	4" (102) x 1.75" (44)	4" (102) x 1.75" (44)
	Maximum Distance Between Forks (mm)	42" (1067)	42" (1067)
	Carriage Rotation	107°	107°
CAPACITIES	Hydraulic Oil (L)	12 gal (45)	12 gal (45)
	Fuel Tank (L)	8 gal (30)	8 gal (30)
	Cooling System (L)	2 gal (8)	2 gal (8)
GENERAL SPECIFICATIONS	Weight – Without Forks (kg)	5,820/5,865 lbs. (2640/2660)	6,000/6,355 lbs. (2722/2883)
	Turning Radius – Outside Wheels (m)	9'0" (2.74)	8'7" (2.61)
	Overall Height (m)	8'0.5" (2.45)	8'0.5" (2.45)
	Overall Width (m)	8'5" (2.57)	8'5" (2.57)
	Overall Length – Without Forks (m)	9'4" (2.85)	9'7" (2.92)
	Ground Clearance (mm)	10" (254)	10" (254)
	Maximum Drawbar Pull (kN)	4800/5000 lbf. (21/22)	4800/5000 lbf. (21/22)
	Rear Overhang (m)	4'8" (1.4)	4'8" (1.4)
TIRES	Front & Rear	31 x 15.5-15	31 x 10-16.5 / 31 x 15.5-15

* Capacity measured at 24" load center, in front of wheels, with stabilizers down.

LOAD CHARTS

An American National Standard
ANSI/ITSDF B56.14

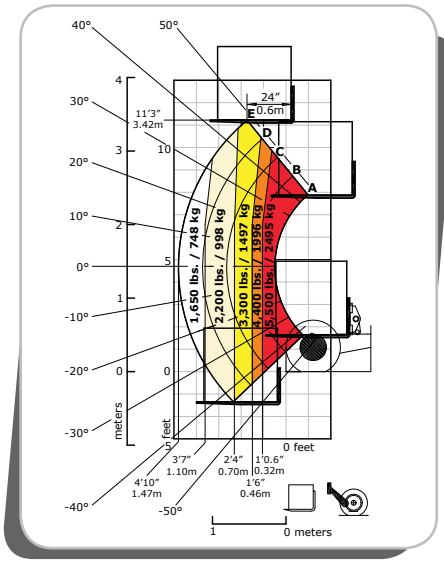

Load Chart with Stabilizers Up

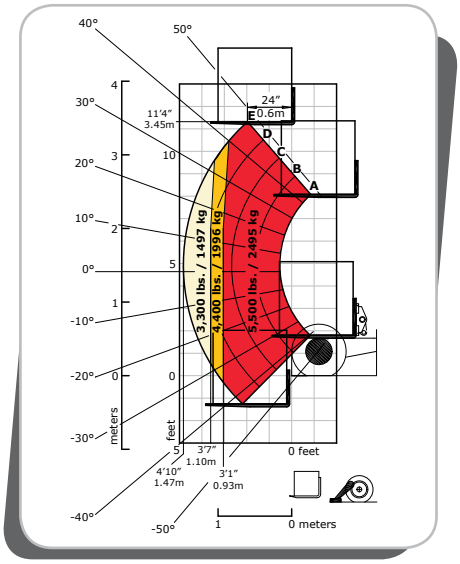

Load Chart with Stabilizers Down

TMT SERIES MODEL DESIGNATION

HT - High Traction (high flotation tires, 400 cc front drive and 560 cc rear drive motors)

XT - Extra Traction (high flotation tires, 750 cc front and rear drive motors, larger hydrostatic pump)

This publication in no way constitutes an offer and the company reserves the right to alter specification without notice.

MANITOU®

Manitou Americas, Inc. • PO Box 179 • West Bend, WI 53095
Tel: 262-334-9461 • Fax: 262-338-7517 • www.manitou.com

©2016 Manitou Americas, Inc. Manitou. All rights reserved. Printed in the U.S.A. A Manitou Group brand.

05/2016-TMT 55-1.5M